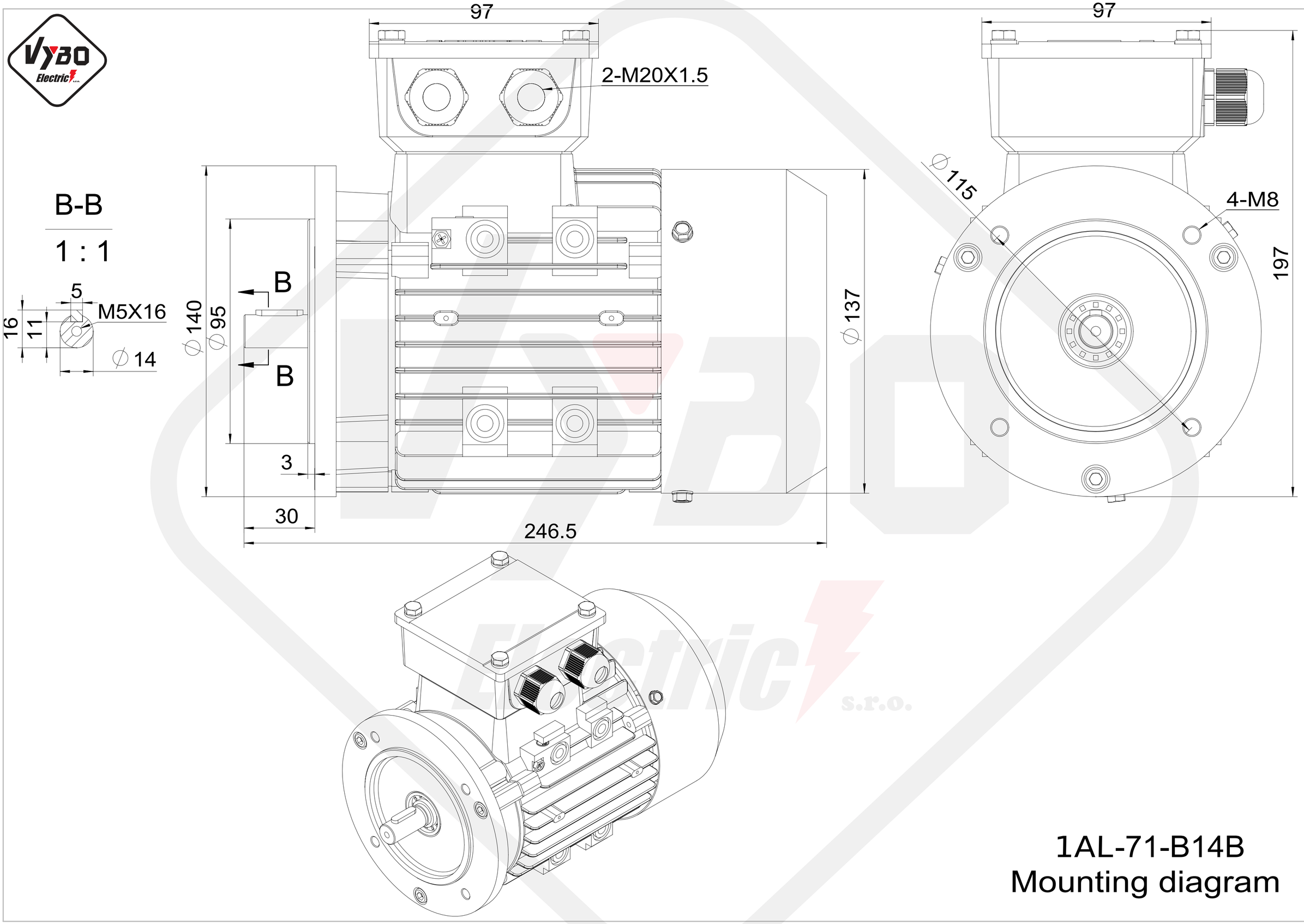

1AL-71-B14B
Mounting diagram